Metallic screws and nuts

On request: AISI 304 - 316 - 410 - B7 - L7 materials

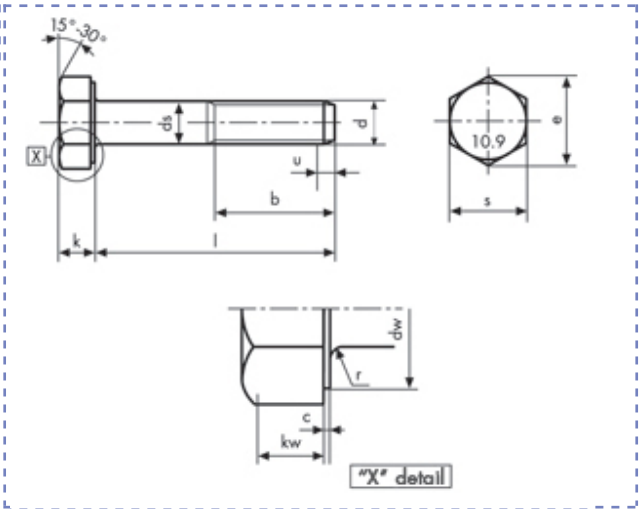

Hexagonal head screws
UNC ANSI B18-2-1 GR5
partially threaded
Class 10.9

Description	Price VATexcl. euro/100	% Price Change 1	% Price Change 2	Package	d inch	L inch
1/ 4 UNC X 2.3/4	**on demand**	-	-	1	1/4	2.3/4

1/ 4 UNC X 2.3/4		
p		1.27
b	**l ≤ 6" (152,4)**	19
	l > 6" (152,4)	25.4
c	**max**	0.63
	min	0.38

ds	**max**	6.35
	min	6.22
dw	**min**	10
k	**max**	4.14
	min	3.81
kw	**min**	2.7

r	**max**	0.63
	min	0.38
s	**max**	11.11
	min	10.87
e	**min**	12.4

Technical informations are indicative and can be updated.
Copyright Gandini Fasteners S.r.l. All rights reserved. No part of this web site may be reproduced in any form without express permission.

GANDINI FASTENERS SRL viale Pier Paolo Pasolini, 83 - 20099 Sesto S.Giovanni Milano Italy
Tel. +39 02 241 047 250 Fax +39 02 241 047 74

Production and distribution of fasteners, fixing elements and mechanical parts machining

GANDINI FASTENERS SRL
viale Pier Paolo Pasolini, 83
Sesto San Giovanni Mi - Italy

Sales department
250@gandini.it
tel +39 02 241 047 250

Administration
350@gandini.it
tel +39 02 241 047 350